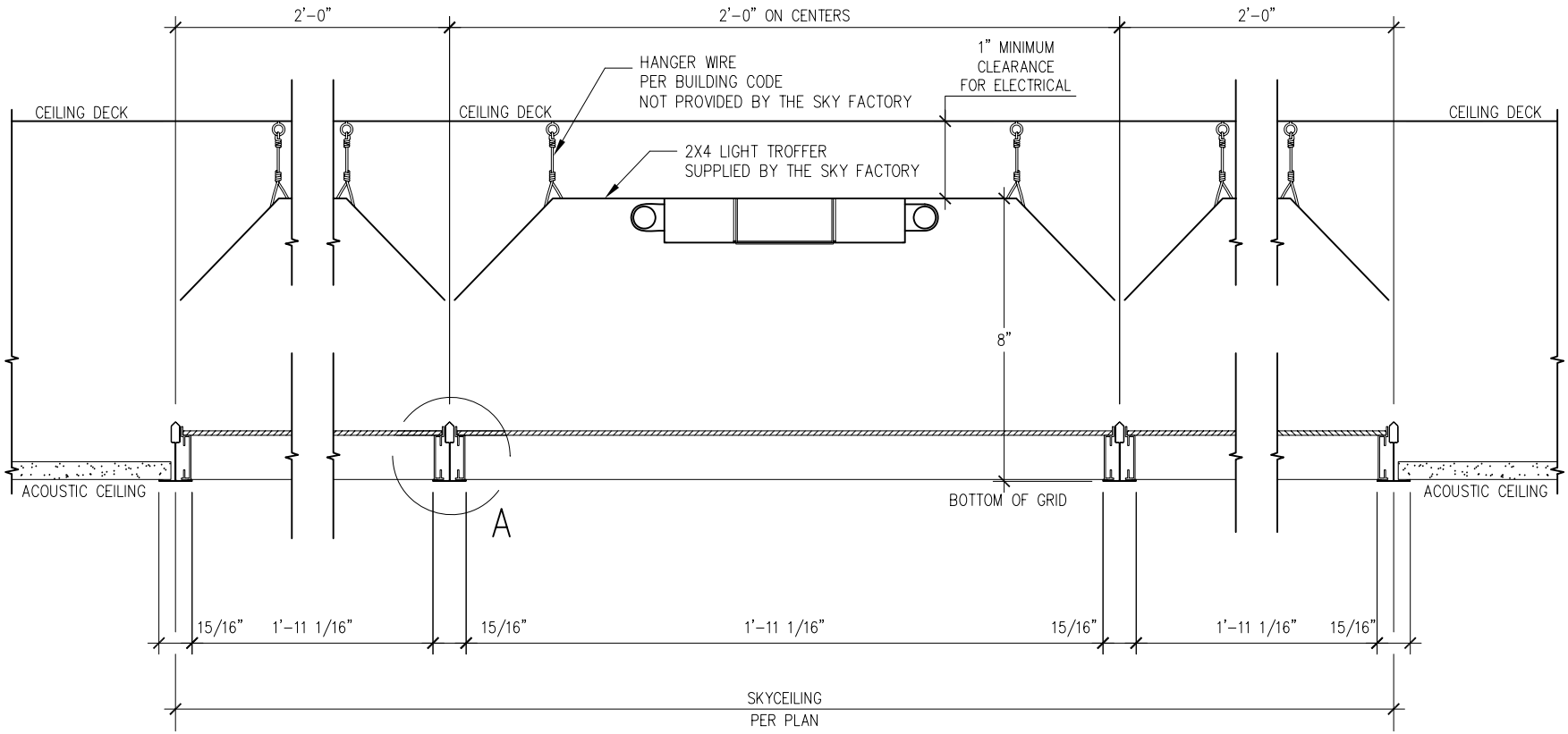

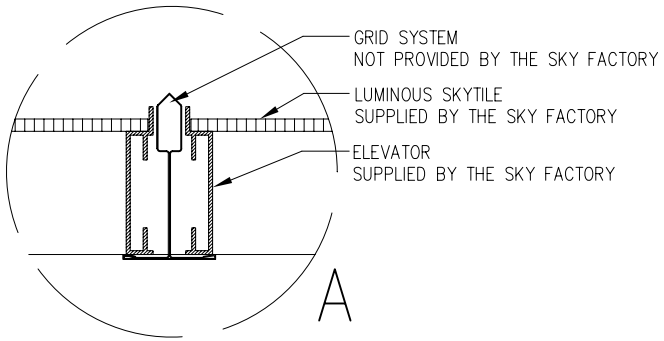

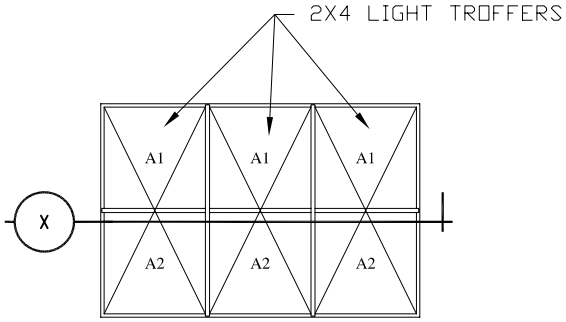

PLAN SHOWN AS REFERENCE

The Sky Factory
PO BOX 1177
Fairfield, Iowa 52556
Phone: 641-472-1747
www.TheSkyFactory.com

PRODUCT

T5 RECTILINEAR SKYCEILING DROP CEILING INSTALLATION CROSS SECTION

DRAWN BY	RVS	DATE CREATED	10/29/2007

REVISIONS

DATE	COMMENTS
02.14.08	JE A DETAIL ETC

XS1

SHEET OF